TRUMPF

TruTool N 160 (1A1)

	订货号	备件			
	No. D'ORDINE	PEZZO DI RICAMBIO			
	NO. DE REF.	PIEZA DE RECAMBIO			
	NO. DE REF.	PIECE DE RECHANGE			
	ORDER NO.	SPARE PART			
NO	BEST.-NR.	ERSATZTEIL			
1	2509376		50	2497118	D 230V 50/60Hz
2	0119582			2497118	CH 230V 50/60Hz
3	0079456			2497120	GB 110V 50Hz
4	0751857			2497119	USA 120V 50/60Hz
5	1749945		51	2467407	
6	2401686		52	2481426	D 230V 50/60Hz
7	2260177			2481426	CH 230V 50/60Hz
8	2401688			2496471	GB 110V 50Hz
9	2260178			2481427	USA 120V 50/60Hz
10	0119586				
11	0117674				
12	2389003				
13	0014583				
14	0119583				
15	0122906				
16	0119301				
17	2393165				
18	0027693				
19	2401689				
20	0143456				
21	2507897				
22	2448903				
23	2448979				
24	0010626				
25	0063908				

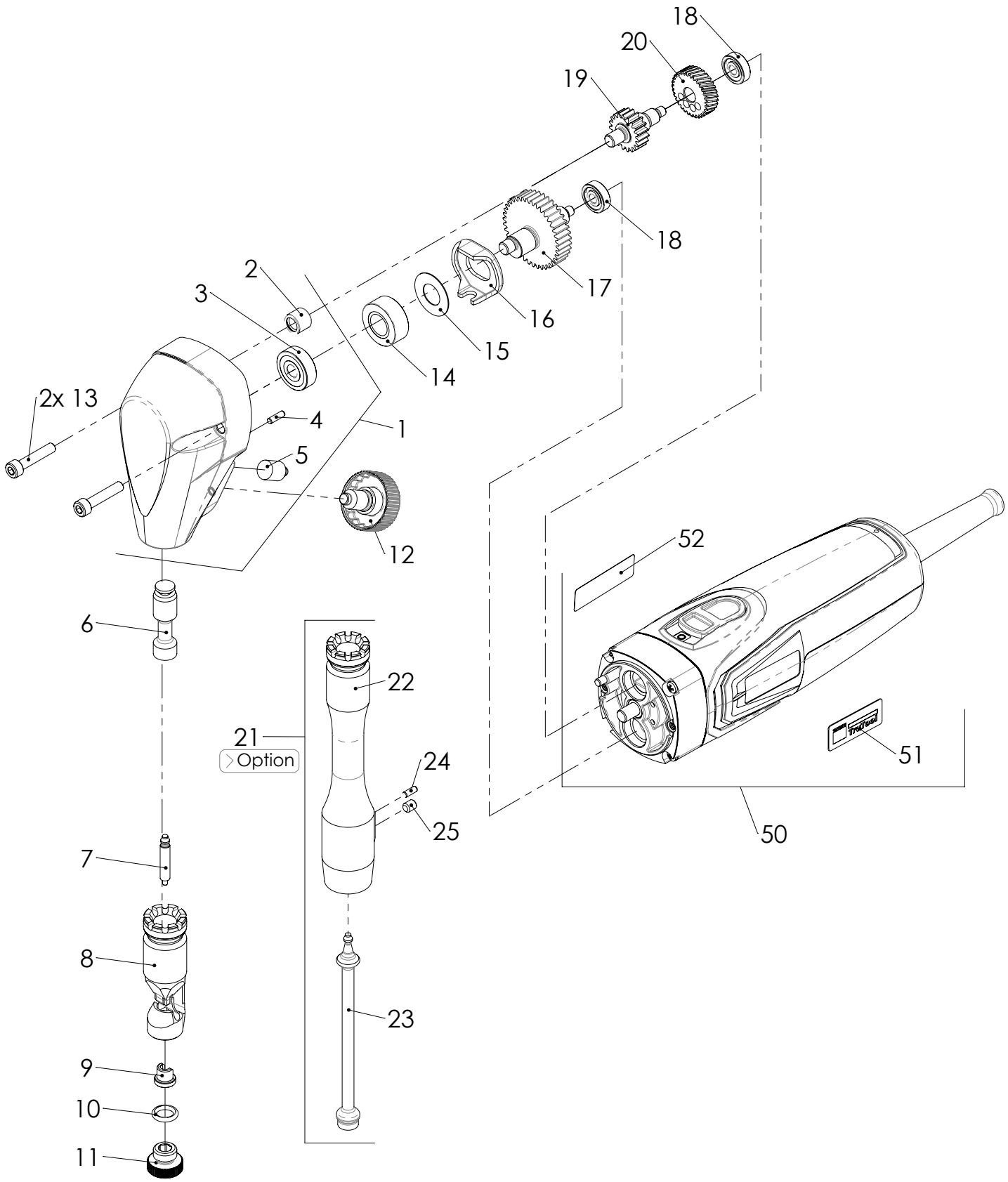
18
20
19
18
17
16
15
14
2
3
2x 13
4
1
5
12
52
6
22
21
Option
24
25
51
50
7
8
23
9
10
11